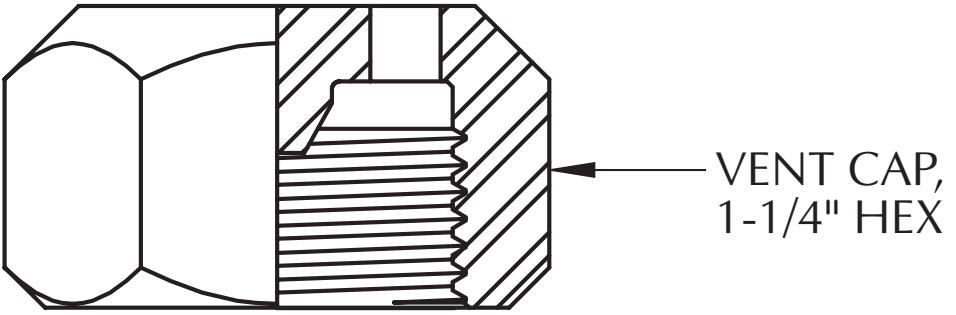
VENT CAP,
1-1/4" HEX

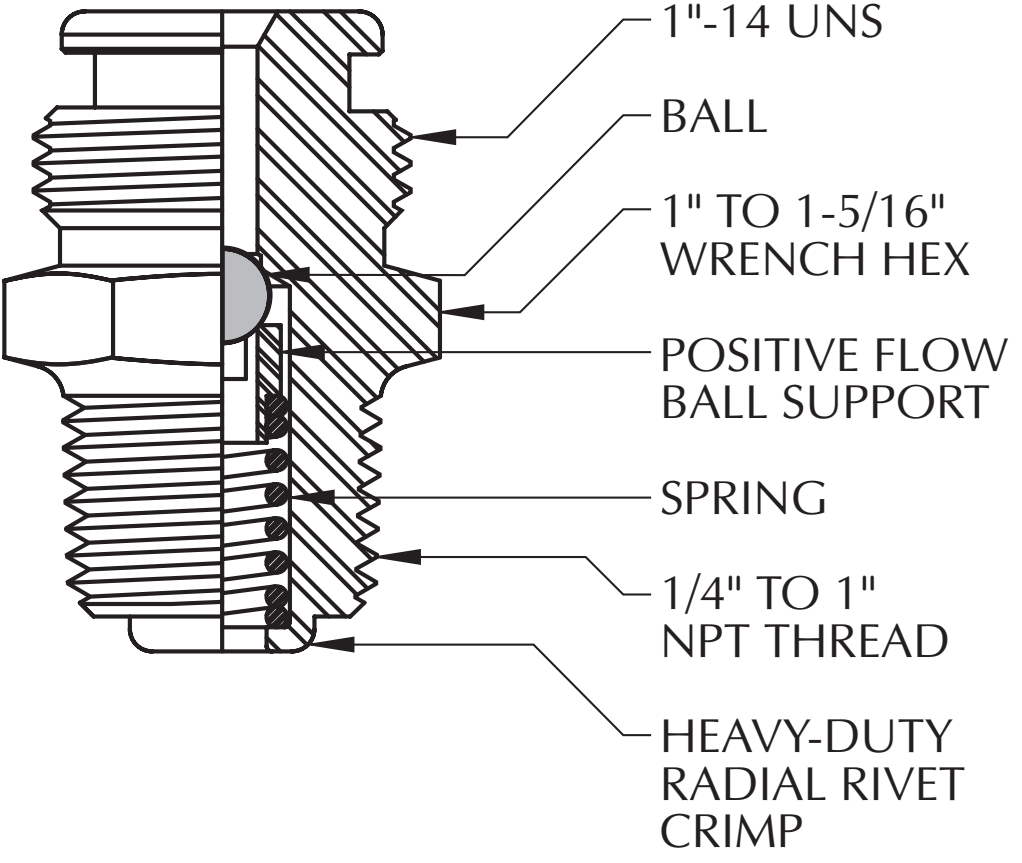
1"-14 UNS
BALL
1" TO 1-5/16"
WRENCH HEX
POSITIVE FLOW
BALL SUPPORT
SPRING
1/4" TO 1"
NPT THREAD
HEAVY-DUTY
RADIAL RIVET
CRIMP